1.0 GENERAL NOTES
- 1.1 ALL METRIC DIMENSIONS ARE IN BRACKETS [X. X]
- 1.2 FOR PATENT INFO: https://www.cs-pat.com

2.0 DESIGN NOTES

3.0 MANUFACTURING/SPECIAL REQUIREMENTS
- 3.1 BUS BAR SHOWN IN VARIOUS MOUNTING CONFIGURATIONS
- 3.2 TIGHTEN ALL BOLTS SNUG TIGHT, DEFINED AS THE CONDITION OBTAINED WITH THE FULL EFFORT OF AN ASSEMBLER USING AN ORDINARY SPUD WRENCH TO BRING THE CONNECTING SURFACES INTO FIRM CONTACT

4.0 TEST

5.0 PACKAGING
- 5.1 PACKAGING SHALL MEET COMMSCOPE REQUIREMENTS PER DOCUMENT IS-PL-3005
- 5.2 PRINTED DOCUMENT TO BE PLACED INSIDE POLYBAG AND THEN IN SHIPPING CONTAINER
- 5.3 EXTRA HARDWARE MAY BE SUPPLIED, BAGGED AND SHIPPED

REVISIONS			
REV.	DESCRIPTION	DATE	APPROVED
A	INITIAL RELEASE	ACG 04FEB08	TP
B	UPDATED DRAWING FORMAT;HARDWARE KIT GB-HK-DPU WAS GB-HK-U	LL1090 03NOV23	AG1119 40182025CMO

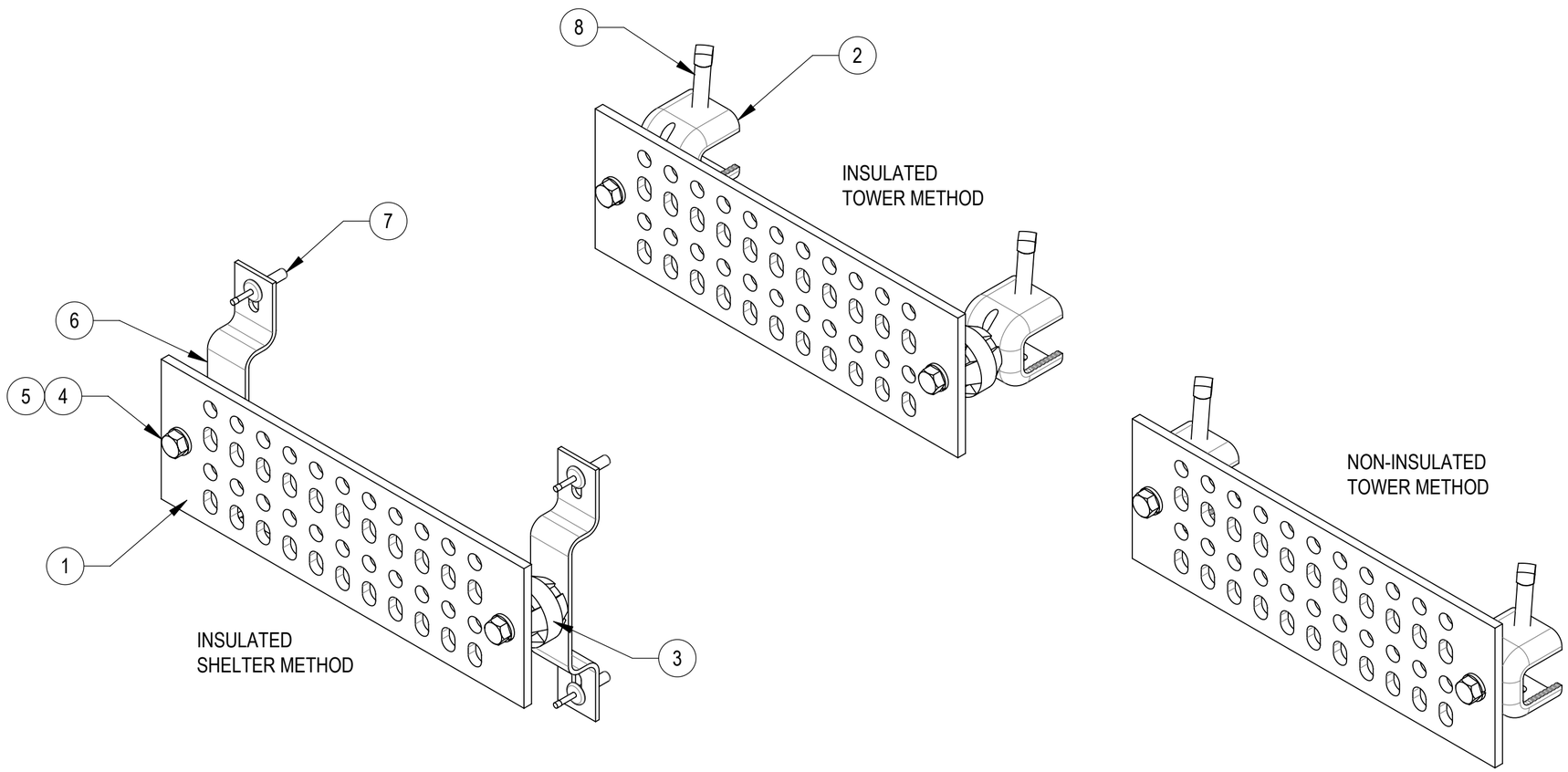

COMPONENT PART NUMBERS PROVIDED FOR ASSEMBLY PURPOSES;
INDIVIDUAL COMPONENTS MAY BE SHIPPED AS PARTS WITHIN AN INCLUDED KIT.

ITEM NO.	PART NUMBER	DESCRIPTION	QTY.	WEIGHT	NOTE NO.
1	MTC977301	GROUND BUS BAR, 4"X12", GALV	1	2.76 LBS	
2	45840G-1	HANGER CLAMP	2	0.38 LBS	
3	MT520	INSULATOR W/ 3/8" INSERT	2	0.21 LBS	
4	SB0305	3/8" X 5/8" SS BOLT	4	0.04 LBS	
5	SWL-03	3/8" SS LOCK WASHER	4	0.01 LBS	
6	MT500GDP	STANDOFF BRACKET	2	0.33 LBS	
7	DPA141ZP	6.5 X 25mm DRIVE PIN ANCHOR	4	0.02 LBS	
8	GB0316-4	SQUARE HEAD SET SCREW, 3/8-16X1-3/4	2	0.07 LBS	

© 2023 CommScope, Inc. Confidential

DENSITY		lbs/in³
MASS	11.55	lbs
VOLUME	47.24	in³
SURFACE AREA	525.73	in²
HEIGHT		
LENGTH		
WIDTH		

COMMSCOPE, INC. OF NORTH CAROLINA

TOLERANCES
1 PLACE .X[.X] ± 0.2[6.3]
2 PLACE .XX[.X] ± 0.12[3.0]
3 PLACE .XXX[.X] ± 0.060[1.5]
ANGLES ± 2°

SAP MATERIAL MASTER: UGBKIT-0412-G

FINISH

MATERIAL

UNLESS OTHERWISE SPECIFIED DIMENSIONS ARE IN INCHES INTERPRET PER ANSI Y 14.5M-1994

	NAME	DATE
CE	ACG	04FEB08
RW	LL1090	11/09/2023
AD	AG1119	11/09/2023
RE	YMENG	11/28/2023
ECN	40182025CMO	

TITLE: GROUND BAR KIT, 4"X12", GALVANIZED

SCALE: 1:4

DOCUMENT NO.: UGBKIT-0412-G

SIZE: C

Auth Group: INSL

MODEL			DRAWING			SHEET
VERSION	STATUS	REVISION	VERSION	STATUS	REVISION	
01	RE	B	01	RE	B	1 OF 1